UNIVERSITY OF CAMBRIDGE INTERNATIONAL EXAMINATIONS
General Certificate of Education
Advanced Subsidiary Level and Advanced Level

CANDIDATE NAME

CENTRE NUMBER

CANDIDATE NUMBER

4009362407

PHYSICS **9702/33**

Paper 3 Advanced Practical Skills 1 **May/June 2012**

2 hours

Candidates answer on the Question Paper.

Additional Materials: As listed in the Confidential Instructions.

READ THESE INSTRUCTIONS FIRST

Write your Centre number, candidate number and name on all the work you hand in.
Write in dark blue or black pen.
You may use a soft pencil for any diagrams, graphs or rough working.
Do not use staples, paper clips, highlighters, glue or correction fluid.
DO **NOT** WRITE IN ANY BARCODES.

Answer **both** questions.
You will be allowed to work with the apparatus for a maximum of one hour for each question.
You are expected to record all your observations as soon as these observations are made, and to plan the presentation of the records so that it is not necessary to make a fair copy of them.
You may lose marks if you do not show your working or if you do not use appropriate units.

Additional answer paper and graph paper should be used only if it becomes necessary to do so.
You are reminded of the need for good English and clear presentation in your answers.

At the end of the examination, fasten all your work securely together.
The number of marks is given in brackets [ ] at the end of each question or part question.

For Examiner's Use	
1	
2	
Total	

This document consists of **10** printed pages and **2** blank pages.

© UCLES 2012

You may not need to use all of the materials provided.

For Examiner's Use

1 In this experiment, you will investigate how the extension of an arrangement of springs depends on the loads applied to it.

(a) (i) Set up the apparatus as shown in Fig. 1.1.

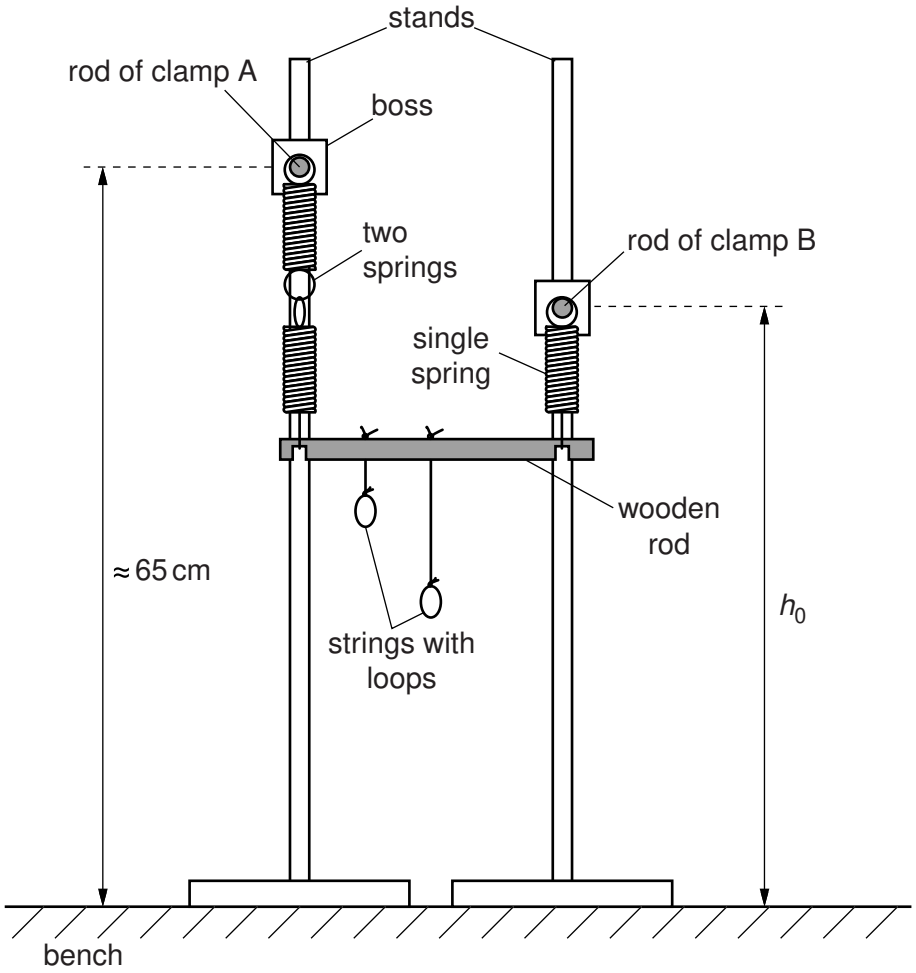

Fig. 1.1

Place the rod of clamp A, supporting the two springs, approximately 65 cm above the bench.

Once fixed do not change the position of the rod of clamp A throughout the experiment.

Suspend the wooden rod, with strings attached, using the springs as shown. Adjust the position of the rod of clamp B until the wooden rod is horizontal.
Ensure the springs hang vertically.

(ii) Measure and record the distance h_0 between the centre of the rod of clamp B (supporting the single spring) and the bench.

h_0 = ...m [1]

(b) (i) Add masses to the wooden rod as shown in Fig. 1.2. The 100 g mass hanger should be attached to the longer, central string.

For Examiner's Use

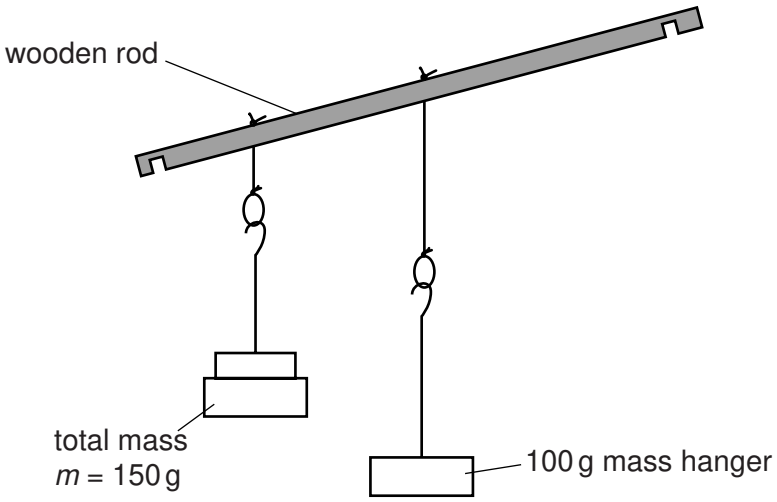

Fig. 1.2

(ii) Adjust the height of the rod of clamp B until the wooden rod is horizontal.

(iii) Measure and record the distance *h* between the centre of the rod of clamp B and the bench, as shown in Fig. 1.3.

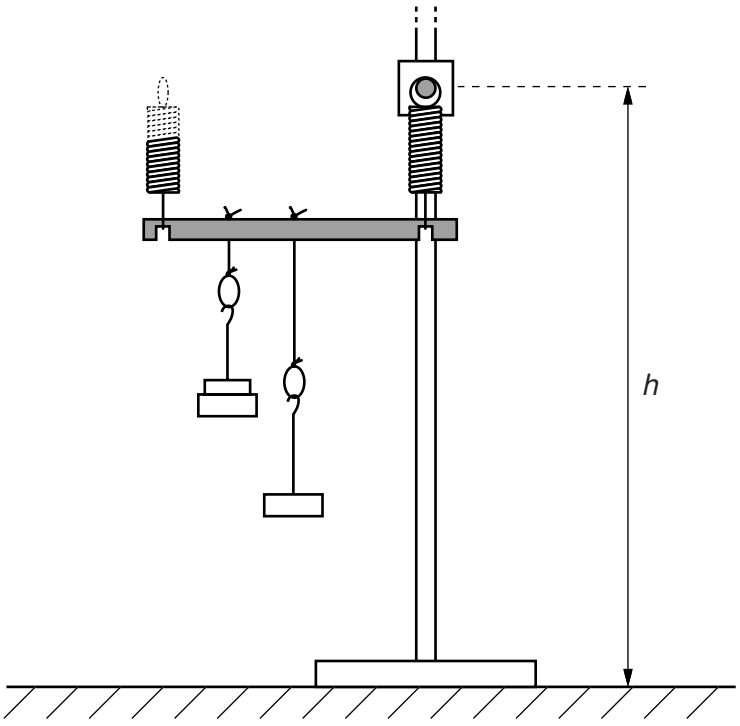

Fig. 1.3

h = ...[1]

(iv) Calculate the value of $(h_0 - h)$.

For Examiner's Use

$(h_0 - h)$ = ...

(c) By increasing the mass m, repeat **(b)(ii)**, **(b)(iii)** and **(b)(iv)** until you have five sets of values of m and h. Do not change the mass attached to the longer, central string.

Include values of $\frac{(h_0 - h)}{m}$ and $\frac{1}{m}$ in your table.

[10]

(d) **(i)** Plot a graph of $\frac{(h_0 - h)}{m}$ on the y-axis against $\frac{1}{m}$ on the x-axis. [3]

(ii) Draw the straight line of best fit. [1]

(iii) Determine the gradient and y-intercept of this line.

gradient = ...

y-intercept = ...

[2]

© UCLES 2012

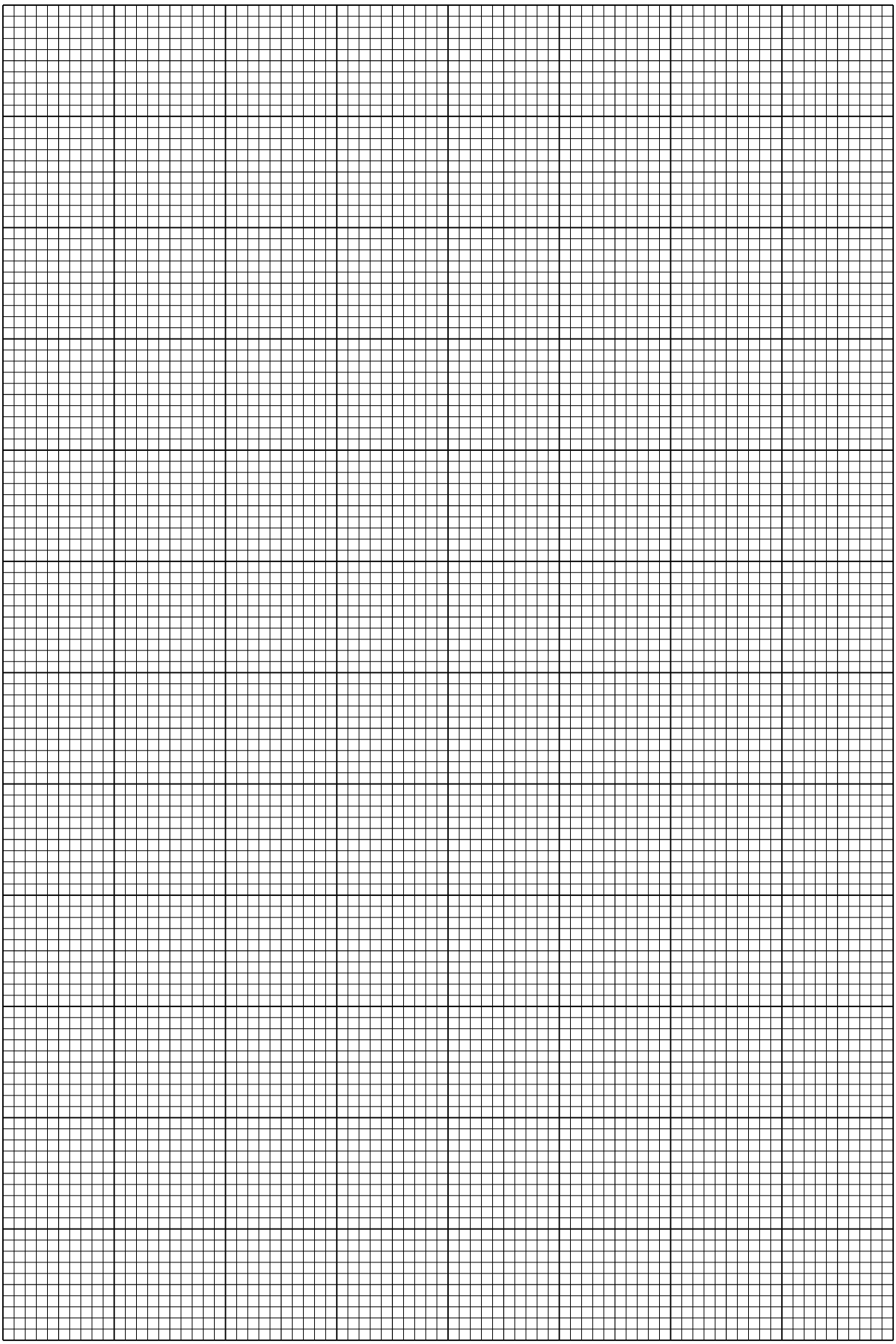

For Examiner's Use

(e) The quantities h and m are related by the equation

$$\frac{(h_0 - h)}{m} = \frac{P}{m} + Q$$

where P and Q are constants.

Use your answers in **(d)(iii)** to determine the values of P and Q.
Give appropriate units.

For Examiner's Use

$P =$ .....

$Q =$ .....

[2]

You may not need to use all of the materials provided.

For Examiner's Use

2 In this experiment, you will investigate how the cooling rate of a hot liquid depends on the surface area of the liquid exposed to air.

(a) (i) Pour cold water into the beaker up to the 200 ml mark.

(ii) Pour the water into the cup and use the pen to place a mark on the inside surface of the cup, level with the water surface.

(iii) Empty out the cold water.

(iv) Repeat **(a)(i)**, **(a)(ii)** and **(a)(iii)** for the bowl.

(b) (i) Pour boiling water into the cup up to the mark.

(ii) When the temperature of the water falls to approximately 75 °C, start the stopwatch.

Record this starting temperature θ_0.

θ_0 = ...[1]

(iii) After two minutes, measure and record the temperature θ.

θ = ...[1]

(iv) Calculate the change in temperature $\Delta\theta = (\theta_0 - \theta)$.

$\Delta\theta$ = ... [1]

(c) (i) Measure and record the diameter *d* of the water surface.

d = ...[1]

(ii) Estimate the percentage uncertainty in your value of d.

For Examiner's Use

percentage uncertainty = ...[1]

(d) Repeat **(b)** and **(c)(i)** for the bowl.

θ_0 = ...

θ = ...

$\Delta\theta = (\theta_0 - \theta)$ = ...

d = ...

[4]

(e) It is suggested that the relationship between $\Delta\theta$ and d is

$$\Delta\theta = k\, d^2$$

where k is a constant.

For Examiner's Use

(i) Using your data, calculate two values of k.

first value of k = ...

second value of k = ...
[1]

(ii) Justify the number of significant figures that you have given for your values of k.

.....

.....

.....[1]

(iii) Explain whether your results in **(e)(i)** support the suggested relationship.

.....

.....

.....

.....[1]

(f) (i) Describe four sources of uncertainty or limitations of the procedure for this experiment.

For Examiner's Use

1. .....

.....

2. .....

.....

3. .....

.....

4. .....

.....

[4]

(ii) Describe four improvements that could be made to this experiment. You may suggest the use of other apparatus or different procedures.

1. .....

.....

2. .....

.....

3. .....

.....

4. .....

.....

[4]

© UCLES 2012

BLANK PAGE

© UCLES 2012

BLANK PAGE

Permission to reproduce items where third-party owned material protected by copyright is included has been sought and cleared where possible. Every reasonable effort has been made by the publisher (UCLES) to trace copyright holders, but if any items requiring clearance have unwittingly been included, the publisher will be pleased to make amends at the earliest possible opportunity.

University of Cambridge International Examinations is part of the Cambridge Assessment Group. Cambridge Assessment is the brand name of University of Cambridge Local Examinations Syndicate (UCLES), which is itself a department of the University of Cambridge.

© UCLES 2012